PHILIPS ADVANCE

Low Pressure Sodium Lamp Ballast

Catalog Number 71A05F0
For 90W L72
60 Hz HX-HPF
Status: Active

DIMENSIONS AND DATA

4 1/4 X 4 3/4 CORE - 2 COIL UNIT

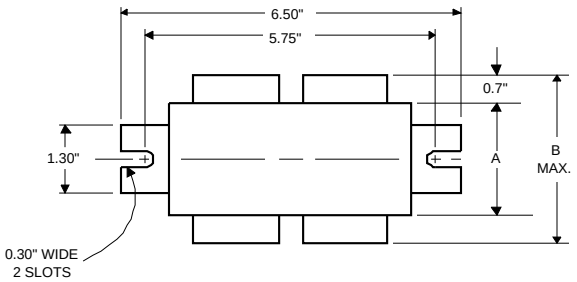

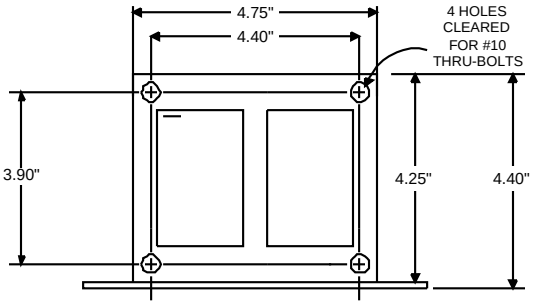

INPUT VOLTS		347	480			
CIRCUIT TYPE	HX-HPF					
POWER FACTOR (min)	90%					
REGULATION						
Line Volts	±5%					
Lamp Watts	±10%					
LINE CURRENT (Amps)						
Operating.....		0.40	0.29			
Open Circuit.....		1.35	0.95			
Starting.....		0.39	0.28			
UL TEMPERATURE RATINGS						
Insulation Class	H(180°C)					
Coil Temperature Code	1029	A	A			
MIN. AMBIENT STARTING TEMP.	-20°F or -30°C					
NOM. OPEN CIRCUIT VOLTAGE	520					
INPUT VOLTAGE AT LAMP DROPOUT.....		180	245			
INPUT WATTS	125					
RECOMMENDED FUSE (Amps).....		4	3			
CORE and COIL						
Dimension (A)	1.75					
Dimension (B)	3.35					
Weight (lbs.)	10.2					
Lead Lengths	12"					
CAPACITOR REQUIREMENT						
Microfarads	16.0					
Volts (min.)	330					
Fault Current Withstand (amps)						
60 Hz TEST PROCEDURES (Refer to Philips Lighting Electronics N.A. TEST Procedure for HID Ballasts - Form						
High Potential Test (Volts)						
1 minute	2000					
2 seconds	2500					
Open Circuit Voltage Test (Volts)	465-575					
Short-Circuit Current Test (Amps)						
Secondary Current	0.91-1.12					
Input Current.....		0.18	0.12	-	-	-
		0.28	0.19			

Capacitor: 7C160M30

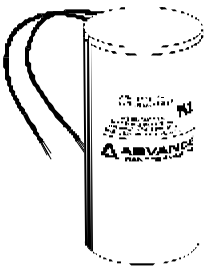

Capacitance: 16
Dia/Oval Dim: 1.5
Height: 3.75
Temp Rating: 105°C

Ignitor: NA

This ballast does not require the use of an ignitor.

Wiring Diagram:

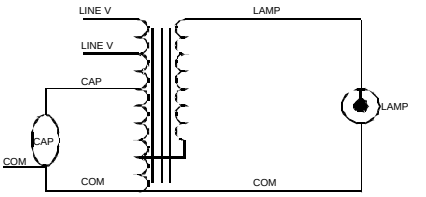

Fig. Q2

U.L. RECOGNIZED

Typical Ordering Information

(please call Philips Lighting Electronics N.A. for suffix availability)

Order Suffix	Description

Data is based upon tests performed by Philips Lighting Electronics N.A. in a controlled environment and is representitive of relative performance. Actual performance can vary depending on operating conditions. Specifications are subject to change without notice.

PHILIPS LIGHTING ELECTRONICS N.A.
10275 WEST HIGGINS ROAD · ROSEMONT, IL 60018
Tel: 800-322-2086 · Fax: 888-423-1882 · www.philips.com/advance
Customer Support/Technical Service: 800-372-3331 · OEM Support: 866-915-5886

Revised: 05/19/05